型號：PK268-01B

Specifications (RoHS)

Model Single Shaft Double Shaft	Connection Type	Holding Torque N·m	Current per Phase A/phase	Voltage V	Resistance per Phase Ω/phase	Inductance mH/phase	Rotor Inertia J: kg·m²	Lead Wires
PK268-01A	Bipolar (Series)	1.75	0.71	12	17.2	56	480×10^{-7}	6
PK268-01B	Unipolar	1.35	1	8.6	8.6	14		

Dimensions (Unit = mm)
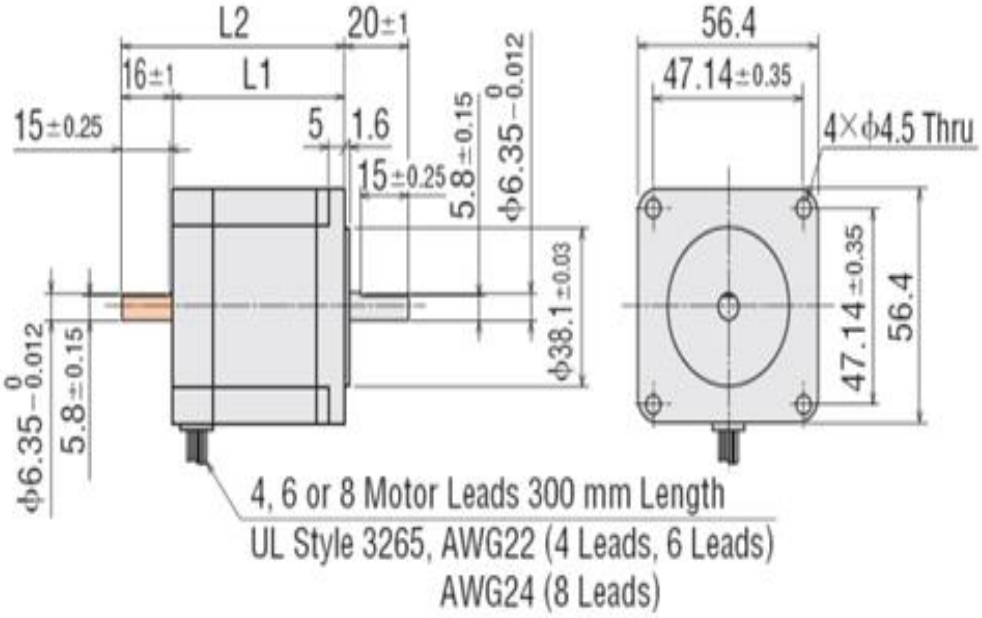
Model	L1	L2	Mass kg
PK268DB, PK268-0□B, PK268-E2.0B	76	–	1.0